DATE February 24, 2007	OUTLINE DIMENSIONS	MOTOR TYPE: ASHH
CATALOG NO. DHP10045	3-PHASE INDUCTION MOTOR	FRAME NO. 404T

Pole	HP	KW	Hz	VOLT	Syn. Speed RPM
4	100	75	60	575	1800

Ins	Rating	Dimension in	Approx Weight	Bearings	
F	CONT.	inches	948 lbs.	DE: 6317	NDE: 6317

Open Protected Drip-Proof Type, Squirrel-cage Rotor.

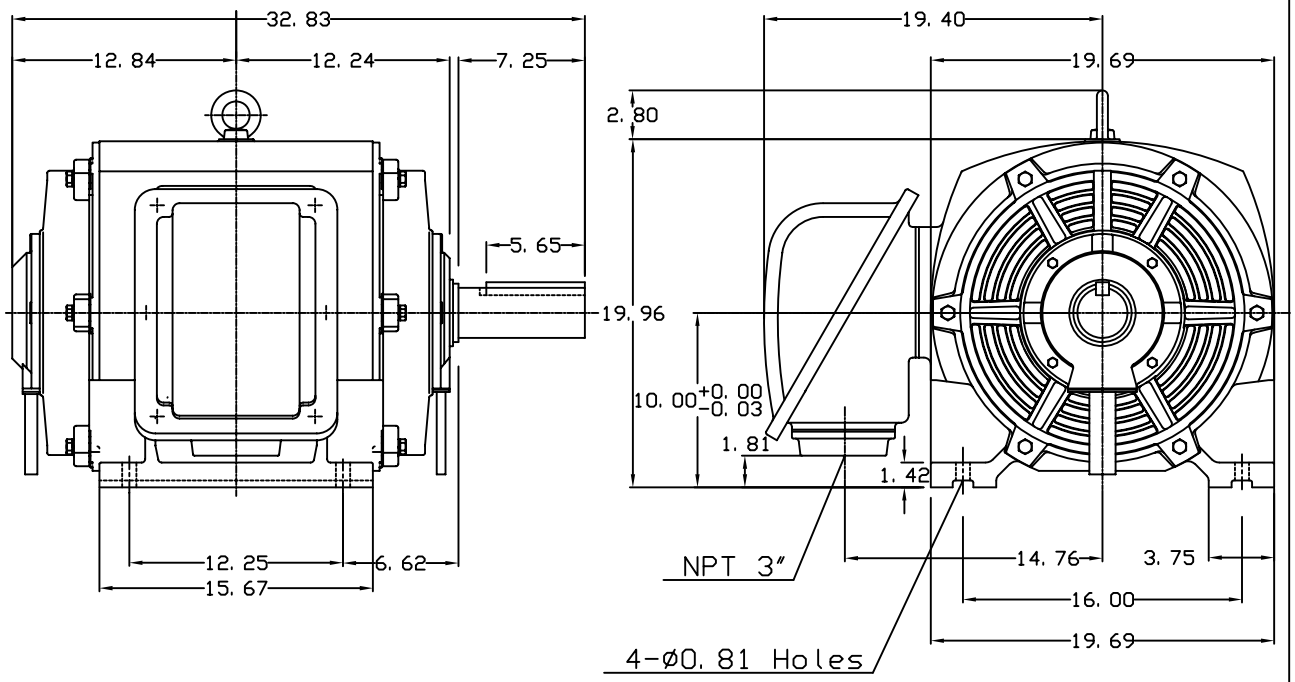

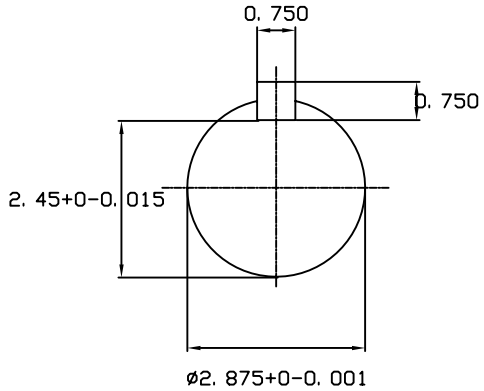

DWN.	J. H. LIANG	12·22·98	TECO Westinghouse
CHKD.	C. H. KAO	06·10·99	
APPD.	Y. B. HUANG	06·10·99	

DWG NO. 31057H398001